Ratchet Handles & Extension Bar

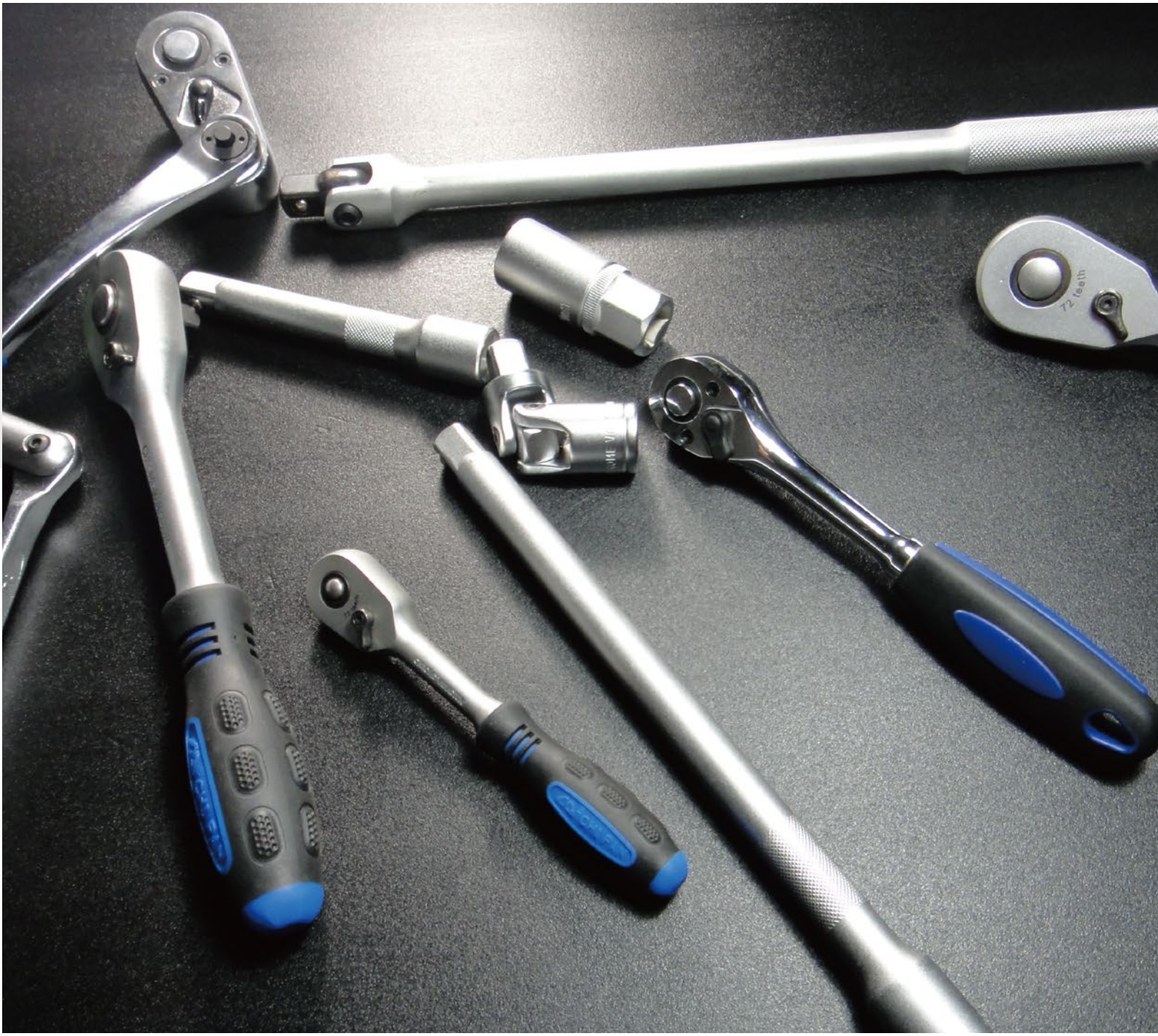

360° Rapid Ratchet Handle

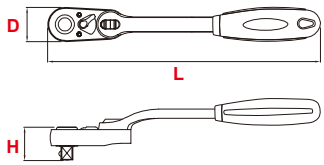

Part No.	Description	■	L		D		H		lb	g		CTN
			inch	mm	inch	mm	inch	mm				
712272-01	1/4" 360° Rapid Ratchet Handle	1/4	7 9/16	192.0	31/32	24.5	1 7/16	36.5	0.42	190	10	60
712372-01	3/8" 360° Rapid Ratchet Handle	3/8	10 11/64	258.0	1 13/64	30.5	1 61/64	49.0	0.85	386	10	60
712472-01	1/2" 360° Rapid Ratchet Handle	1/2	12 1/8	308.0	1 9/16	39.8	2 19/64	58.3	1.60	725	5	30

Quick Release Ratchet Handle

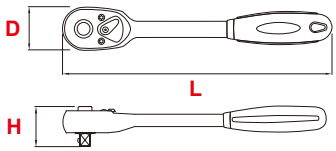

Part No.	Description	■	L		D		H		lb	g		CTN
			inch	mm	inch	mm	inch	mm				
711272-01	1/4" Dr. Ratchet Handle wz Quick Release	1/4	5 29/32	150.0	1 1/32	26.3	29/32	23.0	0.31	140	10	60
711372-01	3/8" Dr. Ratchet Handle wz Quick Release	3/8	7 7/8	200.0	1 9/32	32.5	5/32	29.0	0.64	290	10	60
711472-01	1/2" Dr. Ratchet Handle wz Quick Release	1/2	10 1/4	260.0	1 45/64	43.0	1 15/32	37.0	1.19	540	5	30

Extension Bar

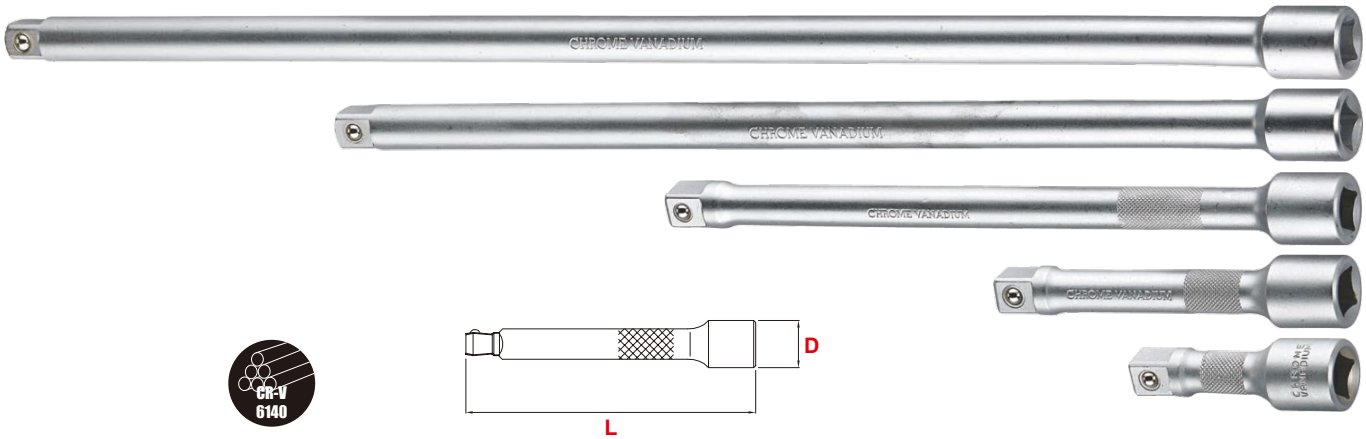

Part No.	Description	■	L		D		lb	g		CTN
			inch	mm	inch	mm				
734075-01	1/2" Dr. Extension Bar 75MM(L)	1/2	2 61/64	75.0	61/64	24.0	0.30	138	6	120
734125-01	1/2" Dr. Extension Bar 125MM(L)	1/2	4 59/64	125.0	61/64	24.0	0.42	192	4	80
734250-01	1/2" Dr. Extension Bar 250MM(L)	1/2	9 27/32	250.0	61/64	24.0	0.95	433	4	64
734380-01	1/2" Dr. Extension Bar 380MM(L)	1/2	14 21/32	380.0	61/64	24.0	1.06	480	1	20
734460-01	1/2" Dr. Extension Bar 460MM(L)	1/2	18 7/64	460.0	61/64	24.0	1.21	550	1	20
734510-01	1/2" Dr. Extension Bar 510MM(L)	1/2	20 5/64	510.0	61/64	24.0	1.40	635	1	20