WASP CRAFT
HAND TOOLS INNOVATOR & MANUFACTURER

05 Vigorous Wrench

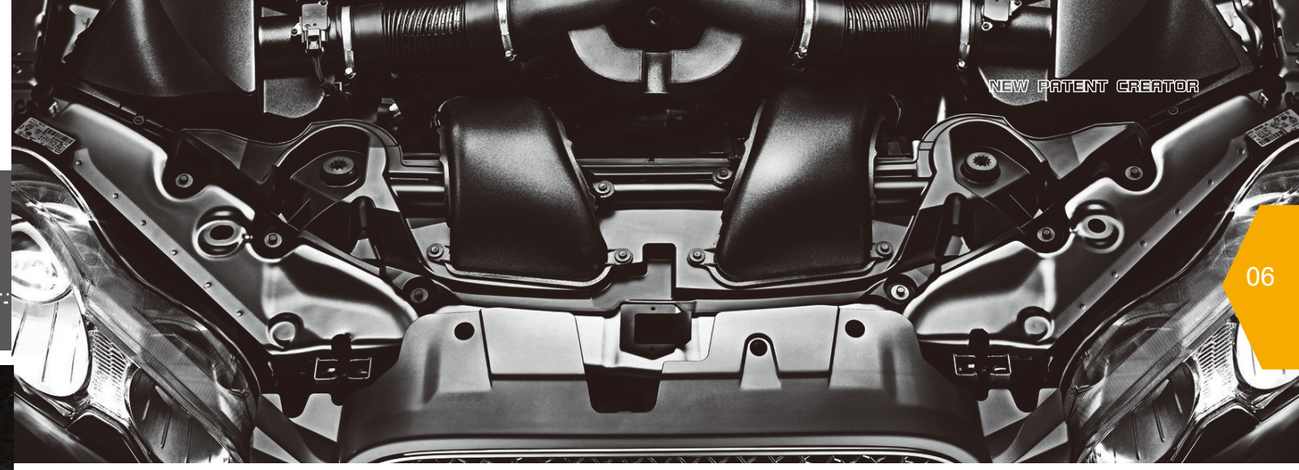

NEW INNOVATIVE PATENT - VIGOROUS WRENCH

The V-Series, Vigorous Wrench were designed and manufacturered by New Way Tools in 2015.
In order to meet the demands of the market, New Way Tools has been dedicated in finding new ways to make adjustable wrench light, short and durable and this amazing patent and unique design make it come ture.
A simple but brilliant machanism making wrench more ergonomic in operation. Accurate tooling and processing methods ensure V-Series working in the field more ergonomically and precisely.

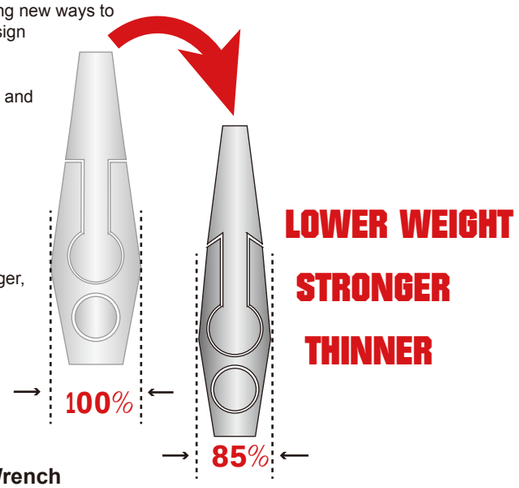

Features

High-Quality professional Vigorous Wrench with intelligent design, high performance Chrome-Vanadium alloy steel and precise manufacturing processes make the jaw stronger, wider and shorter handle than a standard wrench and does not fall out even at maximum opening of the wrench.

Opearating Comparison

Vigorous Wrench

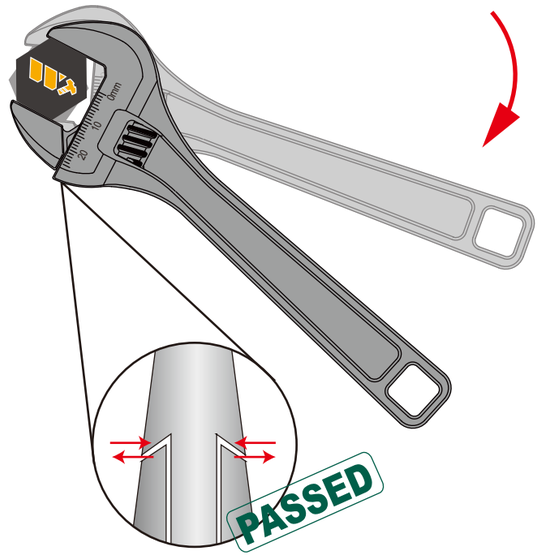

Traditional Wrench

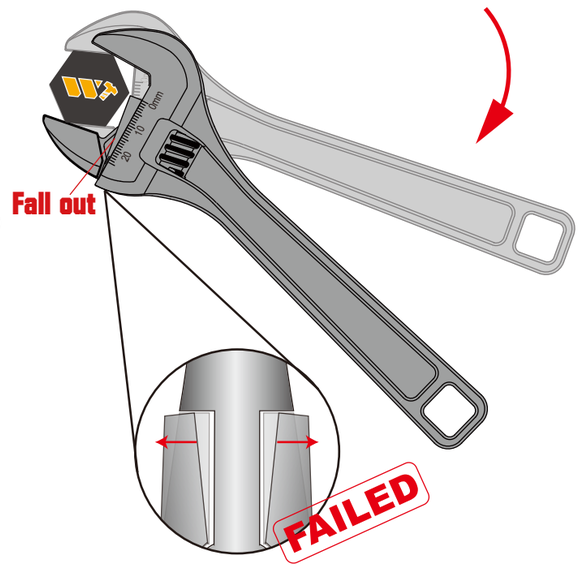

VIGOROUS WRENCH

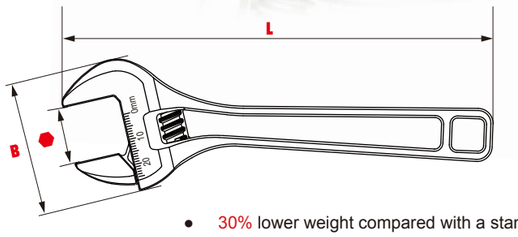

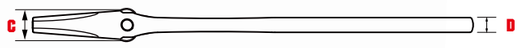

- 30% lower weight compared with a standard adjustable wrench.
- 15% thinner jaws, compared with a standard adjustable wrench.
- Exceeding the torsion of ASME standard is more than 30%↑.
- Special V-design does not fall out even at maximum opening of the wrench.
- Wider opening jaw and shorter handle than a standard wrench.
- High performance Chrome-Vanadium alloy steel.
- One-piece forged steel handle for extra strength.

Item No.	Size	I inch	I mm	L inch	L mm	B inch	B mm	C inch	C mm	D inch	D mm	lb	g		CTN
V0830	08	1 9/64	29.0	8"	200.0	2 7/16	62.0	31/64	12.5	17/64	6.8	0.49	220	12	36

Vigorous Wrench

- Finish: Phosphate

Item No.	Size		CTN
V0810	08	12	36

WARNING
*Chrome handle does not protect against electric shock.
*Do not use cheater bars on handles

Semi-Double Blister + Card

V-Wrench with Semi-Double Blister + Card

Item No.	Size		CTN
V0830-3	08	12	36

V-Wrench with Semi-Double Blister + Card

- Finish: Phosphate

Item No.	Size		CTN
V0810-3	08	12	36

Blister + Card

V-Wrench

Item No.	Size		CTN
V0830-2	08	12	36

V-Wrench

- Finish: Phosphate

Item No.	Size		CTN
V0810-2	08	12	36

Double Blister + Card

V-Wrench

Item No.	Size		CTN
V0830-4	08	12	36

V-Wrench

- Finish: Phosphate

Item No.	Size		CTN
V0810-4	08	12	36

12PCS Display Box Set

12PCS
V-Wrench Set

Item No.	Size	CTN
V0830-8	08	36

Item No.	Size	CTN
V0810-8	08	36

12PCS
V-Wrench Set

Item No.	Size	CTN
V0830-9	08	36

Item No.	Size	CTN
V0810-9	08	36